REVISION HISTORY			
REV	DESCRIPTION	DATE	APPROVED

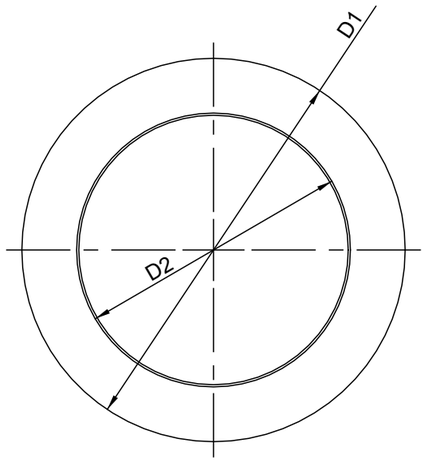

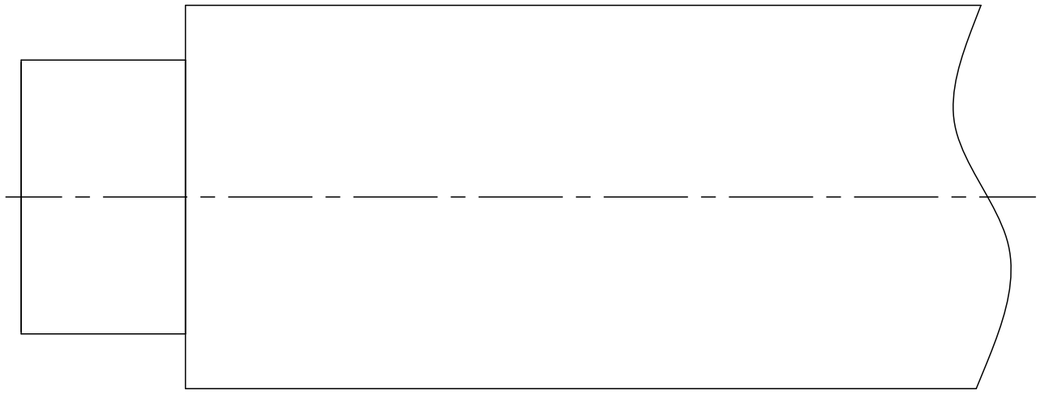

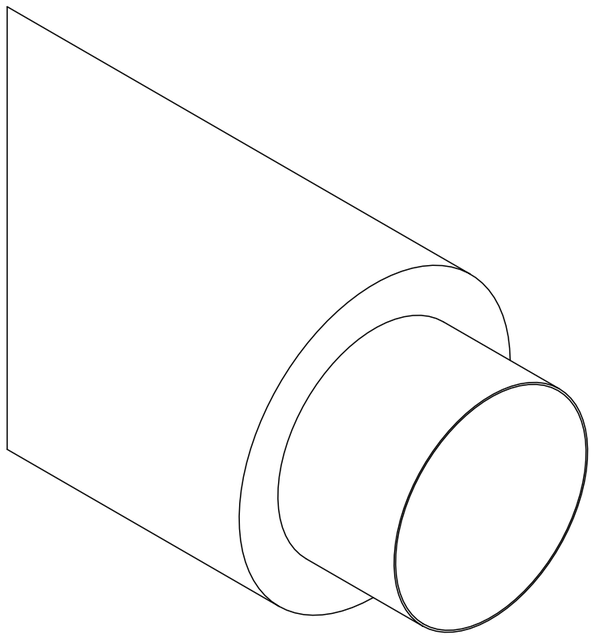

CODICE	DESCRIZIONE	DN	D1	D2	L
SCE212001	**DN 125mm, M/M**	**125mm**	**175**	**123mm**	**1m**
SCE216001	**DN 160mm, M/M**	**160mm**	**210**	**158mm**	**1m**
SCE220001	**DN 200 mm, M/M**	**200mm**	**250**	**198mm**	**1m**

UNLESS OTHERWISE SPECIFIED
DIMENSIONS ARE IN MILLIMETERS
ANGLES ±0.1°

TITLE
FLEXIBLE SILENCER with O-RING

DWG NO
SILENZIATORI FLESSIBILI

SIZE	DRAWN BY:	DATE	REV
A2	MR1	11/02/18	**00**

FILE NAME: SILENZIATORI FLESSIBILI.dft

SCALE:	WEIGHT:	SHEET 1 OF 1